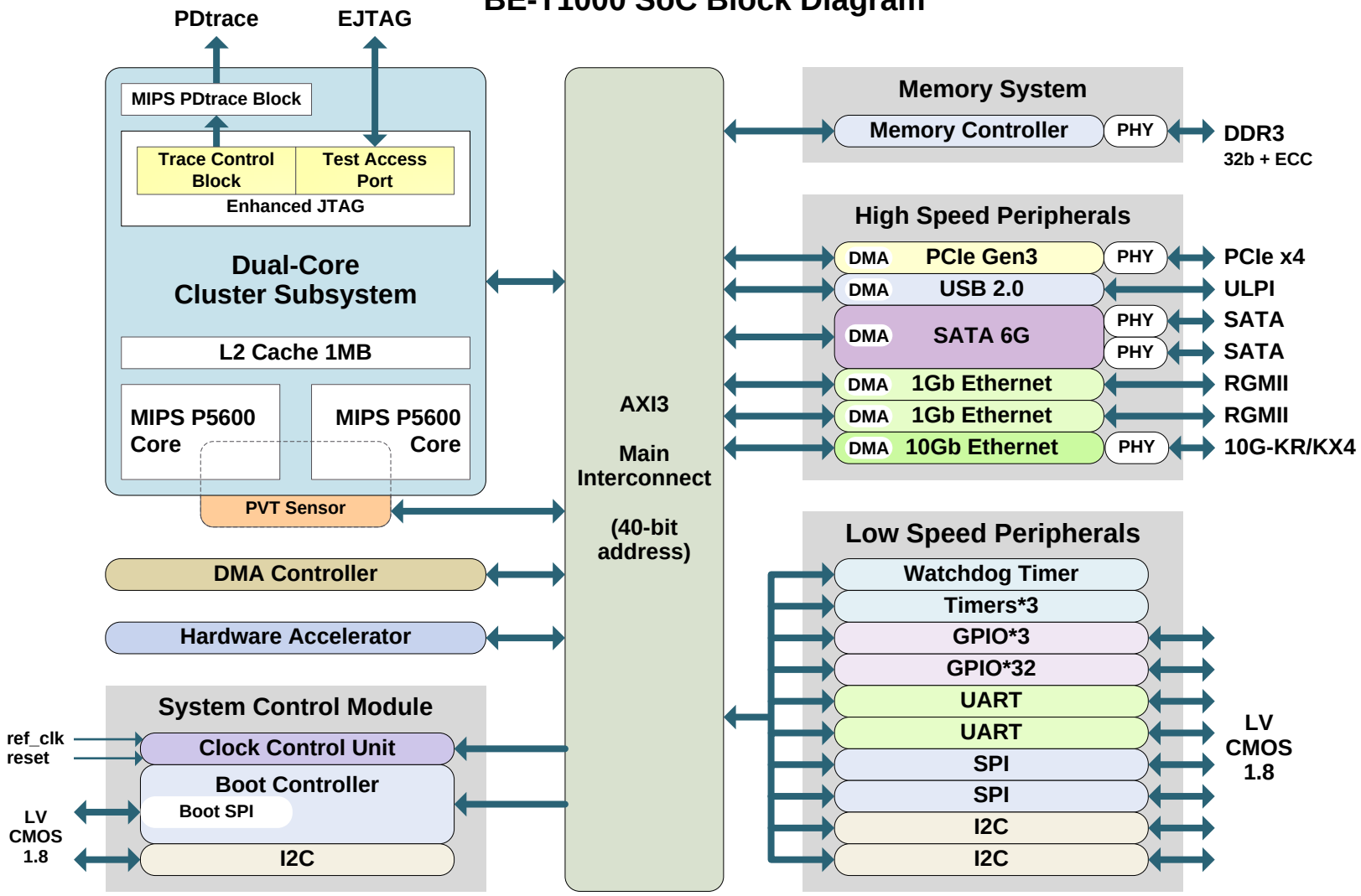# BE-T1000 SoC Block Diagram